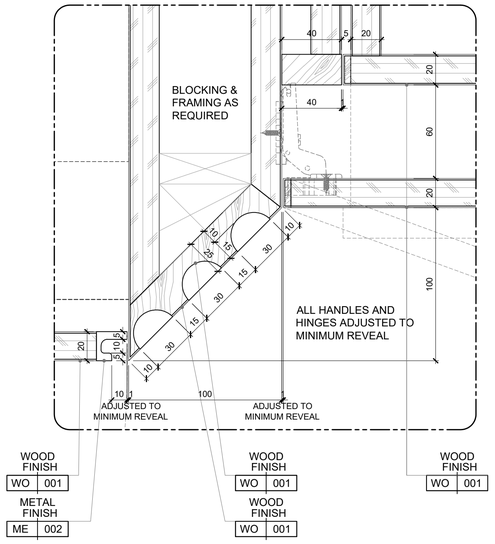

09 DETAIL
SCALE 1:2 (A1) / 1:4 (A3)

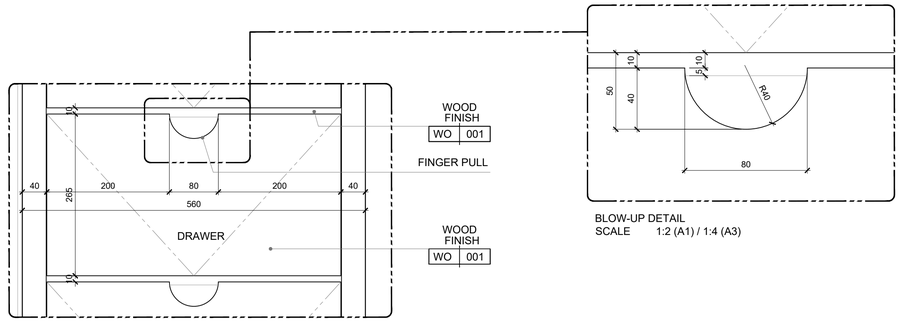

10 DETAIL
SCALE 1:2 (A1) / 1:4 (A3)

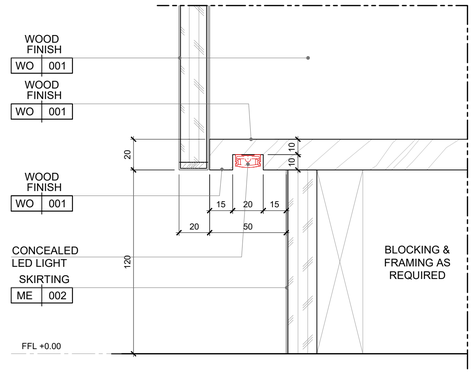

11 DETAIL
SCALE 1:2 (A1) / 1:4 (A3)

GENERAL NOTES

DO NOT TAKE MEASUREMENT DIRECTLY ON THE DRAWING.
ANY DISCREPANCY BETWEEN THIS DRAWING AND OTHER INFORMATION MUST BE REPORTED TO POD ARCHITECTURE.
FOR UNDER CONSTRUCTION OR EXISTING BUILDING, CONTRACTOR IS REQUIRED TO VERIFY THE CORRESPONDENCE BETWEEN THE REAL DIMENSIONS POINTED ON SITE AND THOSE LISTED ON THE DRAWING.
IN CASE OF DISCREPANCY BETWEEN THIS DRAWING AND APPROVED DRAWINGS OF SUBCONTRACTOR, SUBCONTRACTOR'S DRAWINGS ARE PRIORITY.
CONFLICT ARISING OUT OF THE INFORMATION AS INDICATED ABOVE MUST BE REPORTED IMMEDIATELY TO POD ARCHITECTURE.
THIS DRAWING IS THE INTELLECTUAL PROPERTY OF POD ARCHITECTURE.
DIMENSIONS ARE IN MILLIMETERS UNLESS OTHERWISE STATED.

NOTE:
ALL GENERAL DIMENSIONS ARE INDICATIVE ONLY. PLEASE REFER TO EXISTING SITE TO CHECK IF GIVEN DIMENSIONS ARE APPLICABLE. ADJUST TO FIT WHEN NECESSARY.

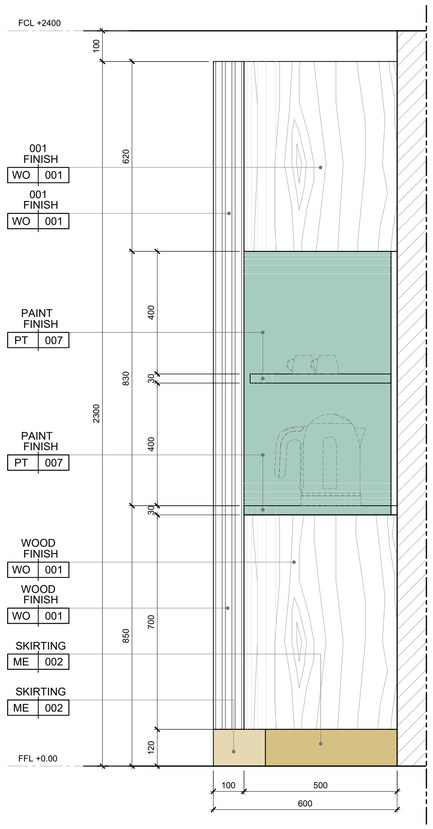

05 ELEVATION
SCALE 1:10 (A1) / 1:20 (A3)

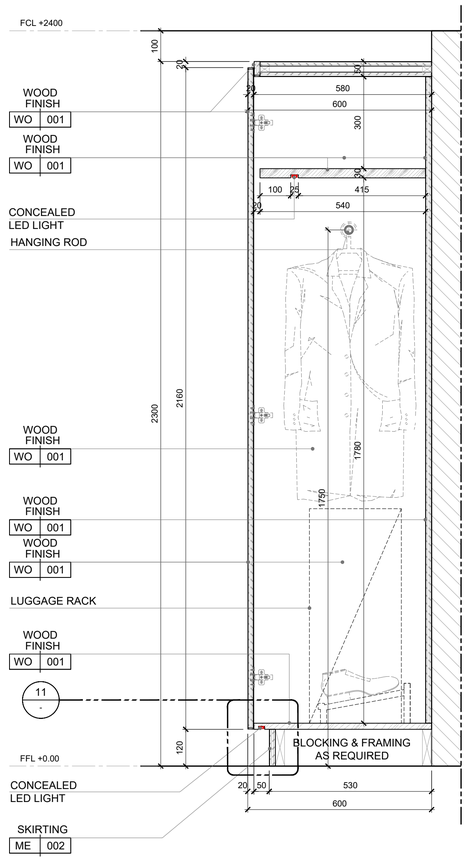

06 SECTION
SCALE 1:10 (A1) / 1:20 (A3)

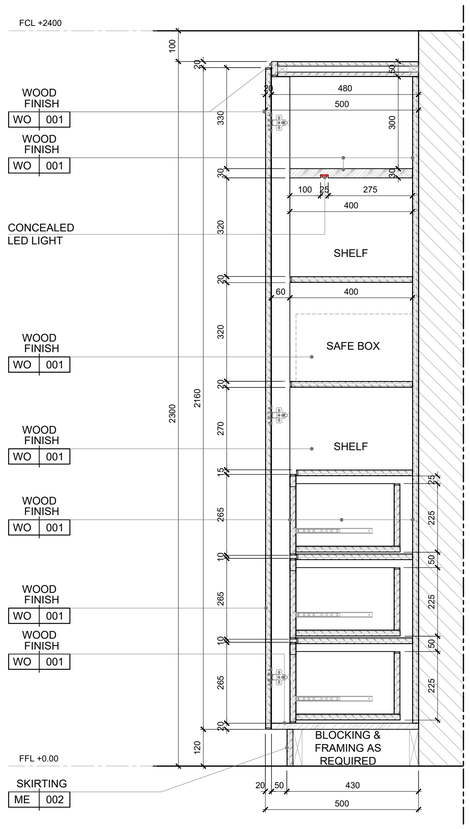

07 SECTION
SCALE 1:10 (A1) / 1:20 (A3)

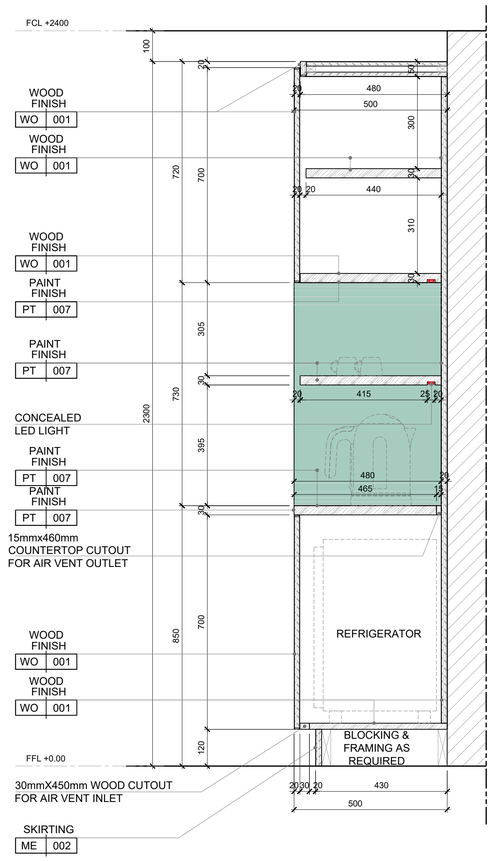

08 SECTION
SCALE 1:10 (A1) / 1:20 (A3)

Legend

Keyplan

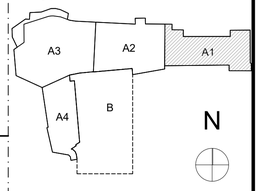

Proprietà
SmeraldaHolding
Smeralda Holding Srl
Casa II Cimepro 1/a,
07021, Porto Cervo (OT)

Project Management
CUSHMAN & WAKEFIELD
Cushman & Wakefield
Via Filippo Turati, 16/18 , 20121, Milano
Arch. Benedetta Abbottoni
Arch. Gianluca Di Cristofaro

Architect
LEV | Arch
Lev arch srl
Via Boccaccio 29 20123 Milano
Arch. Luca Colombo

Local Architect - Structural Engineer
Studio Ingegneria Cannas
Via Georgia - Geocity torre 3, 07026, Olbia (SS)
Ing. Danilo Cannas

Fire - Acoustic Consultant
Italiambiente s.r.l.
Corso Telesio, 10/7/a , 10149, Torino
Arch. Emanuela Piolatto
Ordine Architetti di Torino n. TO04836A01207

System Engineer
BRE engineering s.r.l.
Via Barozzi, 6, 20122, Milano
Ing. Antonio Abramo Bozino Resmini
Ordine Ingegneri di Milano n. 24843

Interior Designer
ATELIER POD
Atelier POD
301 JLT Dubai UAE, PO 337416, Tel 044212701
Laurine Hugel
Jean Luc Debar

Terms and conditions The signature of every drawing stands for the full acceptance of the included data. In case the client does not sign the drawings by the date requested by our studio every data included will be considered accepted. All data, graphics and description are referring exclusively to the aesthetic part of the project and never to executive part. The measures, the executive project, the tecnical realisation and engineering of project achieved by third parties have to be presented to our studio for approval. Otherwise our studio will bear no responsibility for the modifications achieved during the execution and the variations in relation to the original project.

Le basi del disegno derivano dai seguenti documenti: *Tennis club drawings starting points are*
Base grafica degli esterni: Rilievo del 2004; *Exterior drawings: 2004 Survey;*
Base grafica dell'edificio: Stato di Fatto Ing. Cannas del 17/07/2023; *Building drawings: 17/07/2023 As Built from Ing. Cannas;*
Base grafica di quote e info interne all'edificio: Sanatoria Ing. Cannas del 23/07/2022 e rilievo 09/2023
Interior and exterior levels: 23/07/2022 amnesty from Ing. Cannas + 09/2023 survey
NB. Le quote di livello del rilievo 2004 (xxx) differiscono dalle ultime del rilievo 2023 (xxx) di circa 1, 30mt
*Levels from 2004 survey (xxx) and the last from 2023 survey **(xxx)** differs by 1, 30mt*

MOCK-UP ROOM DETAIL DESIGN
First Floor Guestroom 103

Project: Cervo Tennis Club
Municipality: Arzachena
Site: Via Porto Vecchio, 4 Porto Cervo 07021

Sheet Title: **GUESTROOM MUR [FFE-1004] WARDROBE-1 DETAILS**
Scale: AS SHOWN
No. Drawing: **CTC_MOC_ID_DT_811_A1**

digital file index: CTC_MOC_ID_DT_810_A1 Wardrobe-1.dwg
Date: 2024.02.20
Format: A1

Revision

rev.	date	status	design	control	approve
A	2024.02.20	DD.P1 - FIRST ISSUE	LH	KM	-
B	2024.03.01	DD.P1 - SECOND ISSUE	LH	KM	-
C	2024.03.22	DD.P1 - THIRD ISSUE	LH	KM	-
D	2024.05.03	DD.P1 - FOURTH ISSUE	LH	KM	-
E	2024.09.27	DD.P1 - FIFTH ISSUE	LH	KM	-

ATELIER POD
Dubai-Paris-Casablanca
www.atelierpod.com